AudioReach LA Architecture

Qualcomm Technologies, Inc.

Qualcomm
Confidential - May Contain Trade Secrets
2022-08-10 09:35:26 GMT
nijiasheng@longcheer.com

80-VN500-7 Rev. B

Confidential – Qualcomm Technologies, Inc. and/or its affiliated companies – May Contain Trade Secrets

NO PUBLIC DISCLOSURE PERMITTED: Please report postings of this document on public servers or websites to: DocCtrlAgent@qualcomm.com.

Restricted Distribution: Not to be distributed to anyone who is not an employee of either Qualcomm Technologies, Inc. or its affiliated companies without the express approval of Qualcomm Configuration Management. Distribution to anyone who is not an employee of either Qualcomm Incorporated or its affiliated companies is subject to applicable confidentiality agreements.

Confidential and Proprietary – Qualcomm Technologies, Inc.

Qualcomm
Confidential - May Contain Trade Secrets
2022-08-10 09:35:26 GMT
jijiasheng@longcheer.com

Confidential – Qualcomm Technologies, Inc. and/or its affiliated companies – May Contain Trade Secrets

NO PUBLIC DISCLOSURE PERMITTED: Please report postings of this document on public servers or websites to: DocCtrlAgent@qualcomm.com.

Restricted Distribution: Not to be distributed to anyone who is not an employee of either Qualcomm Technologies, Inc. or its affiliated companies without the express approval of Qualcomm Configuration Management. Distribution to anyone who is not an employee of either Qualcomm Incorporated or its affiliated companies is subject to applicable confidentiality agreements.

Not to be used, copied, reproduced, or modified in whole or in part, nor its contents revealed in any manner to others without the express written permission of Qualcomm Technologies, Inc.

All Qualcomm products mentioned herein are products of Qualcomm Technologies, Inc. and/or its subsidiaries.

Qualcomm is a trademark of Qualcomm Incorporated, registered in the United States and other countries. Other product and brand names may be trademarks or registered trademarks of their respective owners.

This technical data may be subject to U.S. and international export, re-export, or transfer (“export”) laws. Diversion contrary to U.S. and international law is strictly prohibited.

Qualcomm Technologies, Inc.
5775 Morehouse Drive
San Diego, CA 92121
U.S.A.

©2019-2020 Qualcomm Technologies, Inc. and/or its subsidiaries. All rights reserved.

Revision History

Revision	Date	Description
A	November 2019	Initial release
B	September 2020	Terminology updates for AudioReach

Note: There is no Rev. I, O, Q, S, X, or Z per Mil. standards.

Qualcomm
Confidential - May Contain Trade Secrets
2022-08-10 09:35:26 GMT
nijiasheng@longcheer.com

Architecture

Qualcomm
Confidential - May Contain Trade Secrets
2022-08-10 09:35:26 GMT
nijiasheng@longcheer.com

LA Architecture on the Elite Framework

- Audio HAL
  - Configures mixer controls for front end/back end connection and codec
  - Invokes TinyALSA APIs to open audio sessions using PCM/compress ALSA user space APIs
  - Sends audio calibration to audio kernel drivers
- ALSA drivers
  - Enumerate sound card with front ends/back ends and mixer controls
  - On ALSA ops, set up ASM/ADM/AFE sessions with respective topologies on the Elite framework
  - Set up codec drivers
  - Send audio calibration to ASM/ADM/AFE
  - Set up buffers to/send receive audio buffer with ASM
  - Module specific mixer controls are exposed

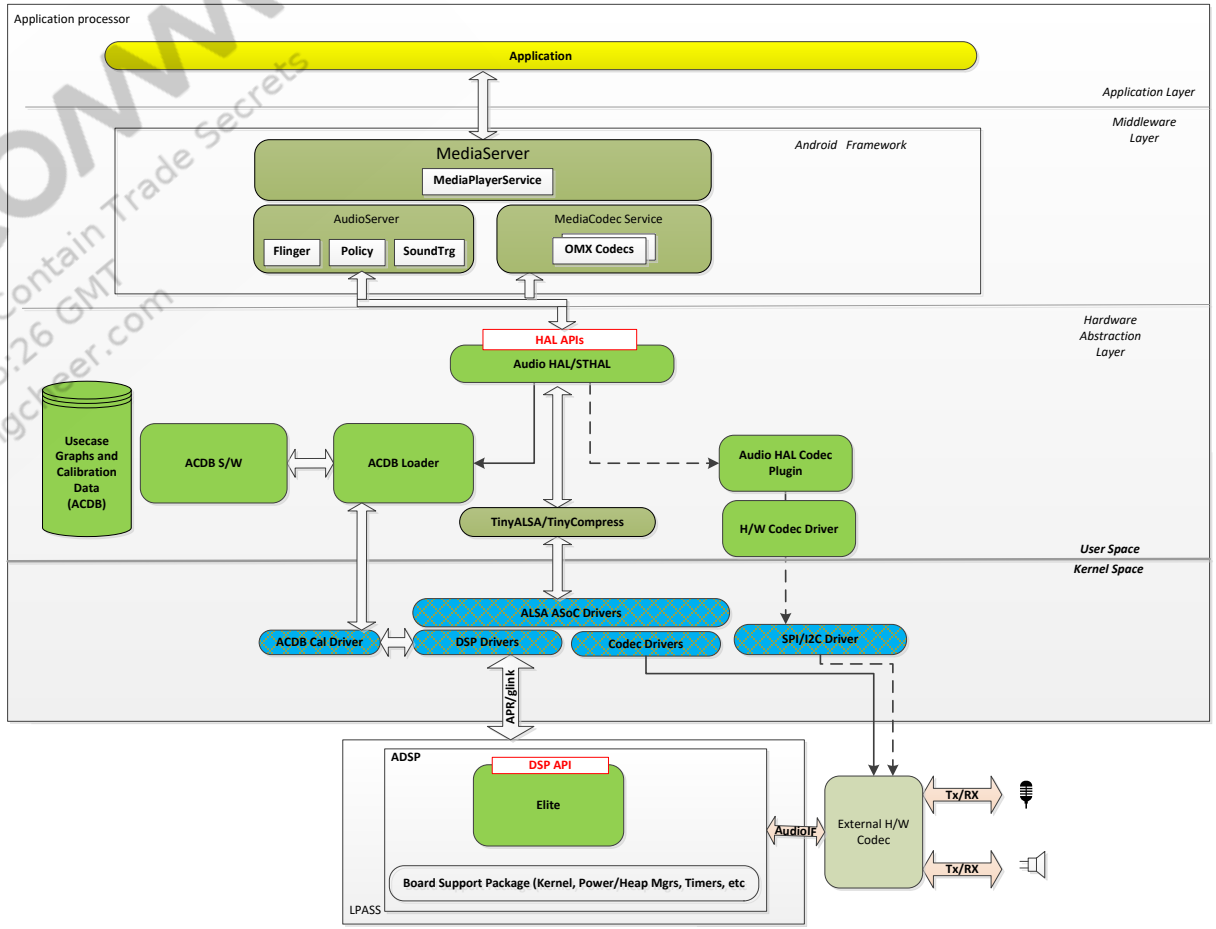

Qualcomm Confidential – May Contain Trade Secrets 2022-08-10 09:35:26 GMT nijianheng@longcheer.com

TinyALSA Plugins

- Current support in TinyALSA/TinyCompress framework
  - Calls into kernel ALSA interfaces (open, close, read, write, ioctl) that is provided by kernel (under UAPI) for audio setup.
- New support added in TinyALSA/TinyCompress framework
  - Optionally load a plugin that allows custom implementation of PCM/mixer/compress modules in the user space
  - Plugins are realized as virtual PCM/compress nodes enumerated on a virtual sound card
- PCM, mixer, compress
  - Upon open, gets the card definition from cards-defs-parser
  - Opens an instance of either hardware (physical) or plugin (virtual) device node
  - Route the operations to either hardware ops or plugin ops based on type
- PCM_HW, MIXER_HW, COMPR_HW
  - Implements all operations to interface with established ALSA kernel ops
  - Re-use existing code from pcm/mixer/compress.c
- PCM_PLUGIN, MIXER_PLUGIN, COMPR_PLUGIN
  - Load dynamic (.so) libraries for each virtual device node
  - Route all PCM/mixer calls from application to plugin-specific implementation
- Plugins
  - Compiled as .so libraries, implement function ops mandated by framework
  - Could perform custom implementation of processing/routing audio data
- Sound card definition (card-defs.xml)
  - Definition of virtual nodes (PCMs/mixers/compress) devices
  - Can define virtual cards as well as add virtual nodes to existing physical card
- Snd-card-parser
  - Parses the card-defs.xml and provide APIs to pcm.c and mixer.c to interface with card-defs.xml

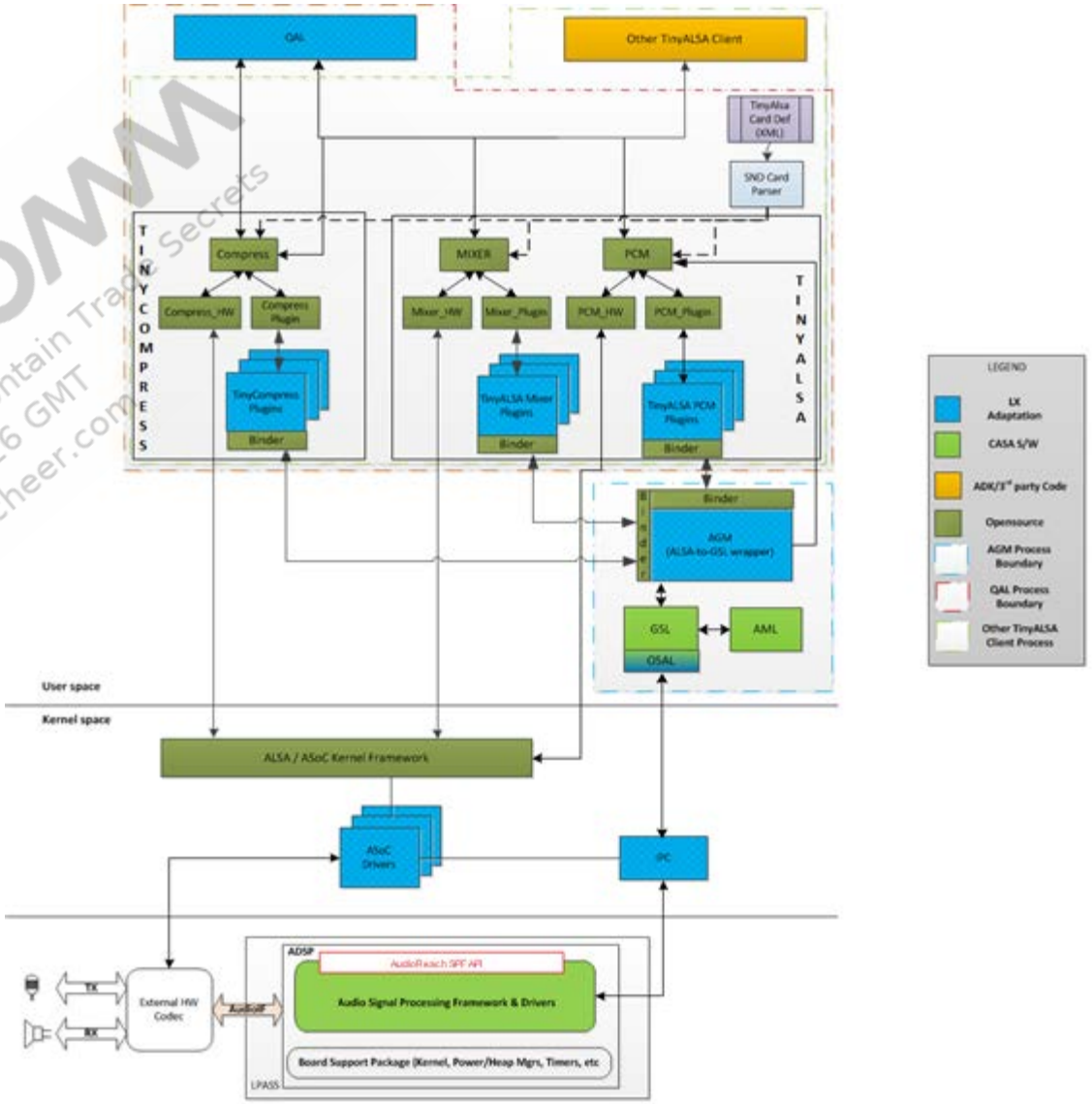

Qualcomm Confidential - May Contain Trade Secrets 2022-08-10 09:35:26 GMT nijiasheng@longcheer.com

Confidential – Qualcomm Technologies, Inc. and/or its affiliated companies – May Contain Trade Secrets | MAY CONTAIN U.S. AND INTERNATIONAL EXPORT CONTROLLED INFORMATION

Card-defs.xml

- XML properties in sound card
- Card
  - ID – Card ID
  - Name – Sound card name to be matched
- PCM device/compress device
  - ID – PCM/compress device ID
  - Name – Name of the PCM/compress device
  - so-name – Plugin file name for PCM/compress device
  - Properties
    - Capture – If PCM/compressed device has capture capability
    - Playback – If PCM/compressed device has playback capability
    - Hostless – If PCM/compressed device has hostless capability
- Mixer
  - ID – Mixer ID
  - Name – Name of the mixer
  - so-name – Plugin file name for mixer

```xml
<defs>
<card>
    <id>100</id>
    <name>sm8150tavilsndc</name>

    <pcm-device>
        <id>100</id>
        <name>PCM100</name>
        <pcm_plugin>
            <so-name>libagm_pcm_plugin.so</so-name>
        </pcm_plugin>
        <props>
            <playback>1</playback>
            <capture>0</capture>
            <hostless>0</hostless>
        </props>
    </pcm-device>

    <compress-device>
        <id>105</id>
        <name>COMPRESS105</name>
        <compress_plugin>
            <so-name>libagm_compress_plugin.so</so-name>
        </compress_plugin>
        <props>
            <playback>1</playback>
            <capture>0</capture>
            <hostless>0</hostless>
        </props>
    </compress-device>

    <mixer>
        <id>1</id>
        <name>agm_mixer</name>
        <mixer_plugin>
            <so-name>libagm_mixer_plugin.so</so-name>
        </mixer_plugin>
    </mixer>

</card>
</defs>
```

Qualcomm Confidential - May Contain Trade Secrets 2022-02-10 09:35:26 GMT nijiasheng@longcheer.com

Confidential – Qualcomm Technologies, Inc. and/or its affiliated companies – May Contain Trade Secrets | MAY CONTAIN U.S. AND INTERNATIONAL EXPORT CONTROLLED INFORMATION

LX Architecture on AudioReach™ Signal Processing Framework (SPF)

- Audio HAL – Provides glue code to translate from Android to QAL APIs
- Qualcomm Audio Library (QAL)
  - Configures mixer controls to setup
    - Front end/back end connections
    - Sets up graph KeyVectors (GKVs) and calibration KeyVectors (CKVs)
    - Codec blocks
    - Module configuration if required for the use case
  - Invokes TinyALSA APIs to open/start audio sessions using PCM/compress ALSA user space APIs
- TinyALSA plugins
  - Enumerate virtual mixer controls and virtual PCM/compressed devices
  - Translate mixer controls to AGM API calls
  - Translates PCM/compress operations to AGM API calls
- Audio graph manager (AGM)
  - Enumerates ALSA back ends published by the sound card
  - Provides DPCM capability by managing front end to back end connections
  - Sets up ALSA back ends based on mixer controls and manages ref-count
  - Sets up GSL session with the GKVs and CKVs
  - Configures GSL buffers for send/receive audio samples
  - Configures encoder/decoder and hardware endpoints (I2S, TDM, SLIMbus, etc.)
- SPF service layer (GSL)
  - Queries graph definitions and calibration from AML using the GKVs and CKVs
  - Sends graph definitions and calibration to SPF
  - Sets up buffers to send/receive audio buffer
  - Manages ref-count on already opened subgraphs

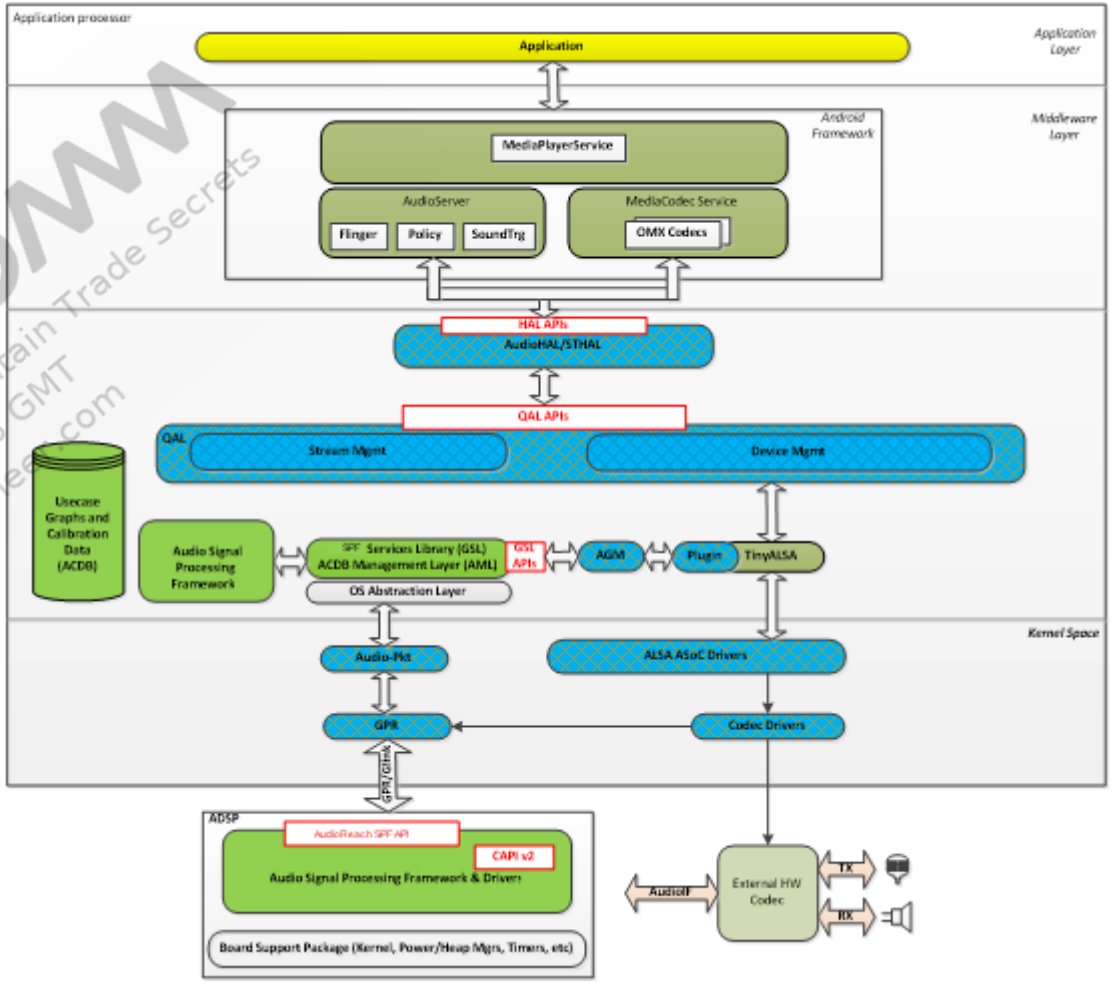

Qualcomm Confidential - May Contain Trade Secrets 2022-08-10 09:35:26 GMT

Graph Realization in ALSA

- ALSA provides DPCM ability to dynamically connect the PCM front end to physical DAI links
- In the Elite framework architecture, the front end represented an ASM session and the back end represented ADM and AFE sessions
- In the SPF architecture, the graph modules are typically grouped based on:
  - Stream – Consists of shared memory EP, decoder, encoder, PCM converter, packetizer, depacketizer
  - Stream-PP – Consists of stream specific PP modules
  - Stream-Device – Consists of any per-stream per-device modules such as channel mixer, MFC, etc.
  - Device-PP – Consists of device specific PP modules
  - Device – Hardware EP
- Front end – Represents the stream and stream-PP modules
- Back end – Represents the stream-device, device-PP,and device

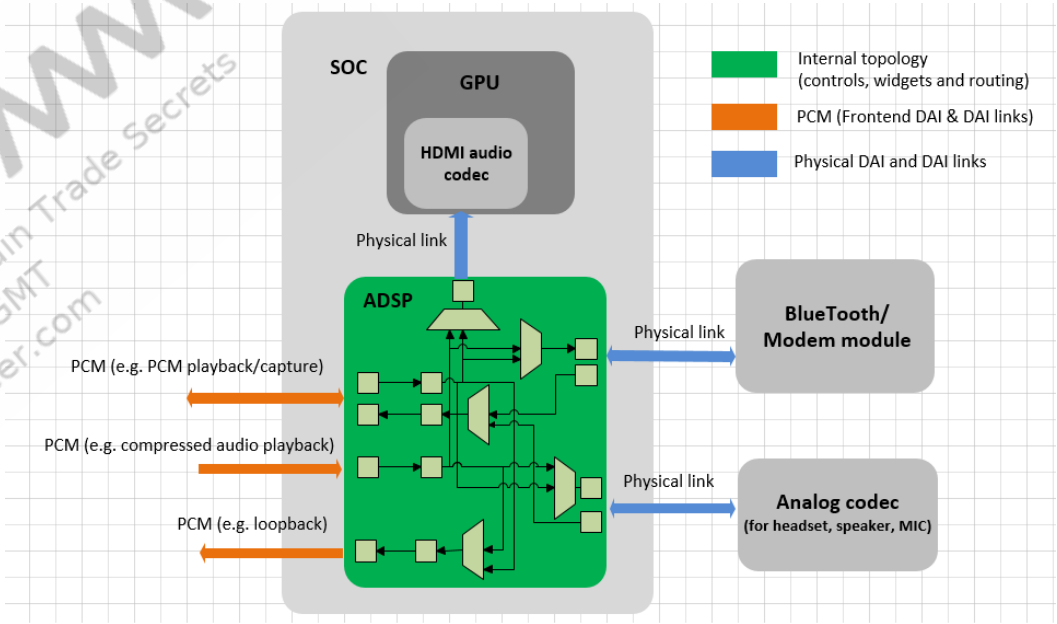

Qualcomm Confidential - May Contain Trade Secrets 2022-08-10 09:35:26 GMT nijiasheng@longcheer.com

Mixer control grouping	KV
Stream KVs	StreamRX KVs, StreamRX PP KVs
Stream + Device KVs	StreamRXDeviceRX KVs, DeviceRX PP KVs
Device KVs	DeviceRX KVs

Confidential – Qualcomm Technologies, Inc. and/or its affiliated companies – May Contain Trade Secrets | MAY CONTAIN U.S. AND INTERNATIONAL EXPORT CONTROLLED INFORMATION

Use Case Realization with ALSA Constructs

Playback single stream single device use case

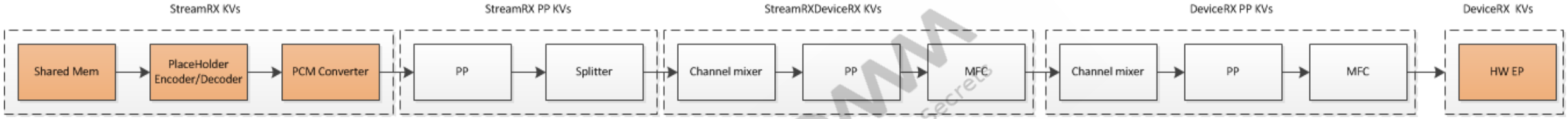

PCM Session 1: GKV1: <StreamRX KVs, StreamRX PP KVs, StreamRXDeviceRX KVs, DeviceRX PP KVs, DeviceRX KVs>

Playback single stream multi-device use case

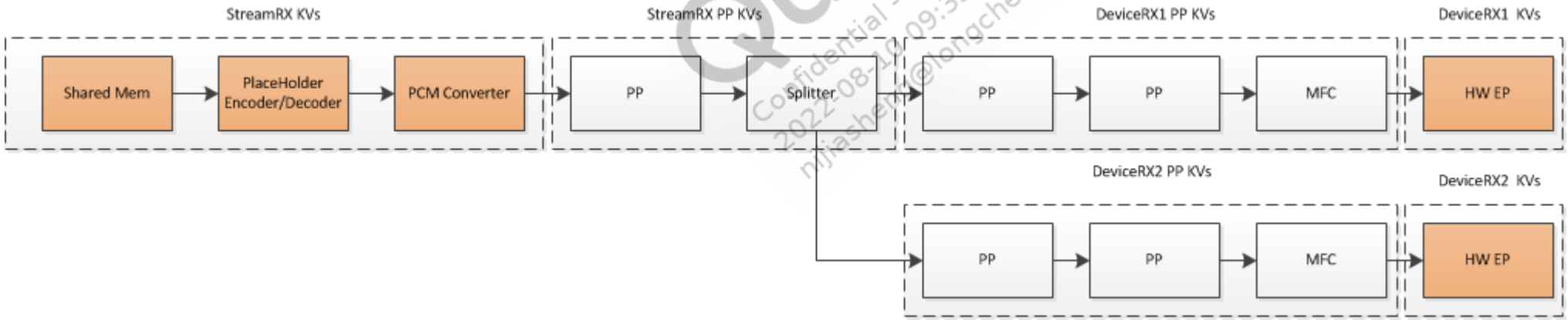

PCM Session 1, Device 1: GKV1: <StreamRX KVs, StreamRX PP KVs, StreamRXDeviceRX1 KVs, DeviceRX1 PP KVs, DeviceRX1 KVs>
PCM Session 1, Device 2: GKV2: <StreamRX KVs, StreamRX PP KVs, StreamRXDeviceRX2 KVs, DeviceRX2 PP KVs, DeviceRX2 KVs>

Qualcomm Confidential - May Contain Trade Secrets 2022-08-10 09:35:26 GMT nijasheer@longcheer.com

Use Case Realization with ALSA Constructs (cont.)

Playback multiple stream single device use case

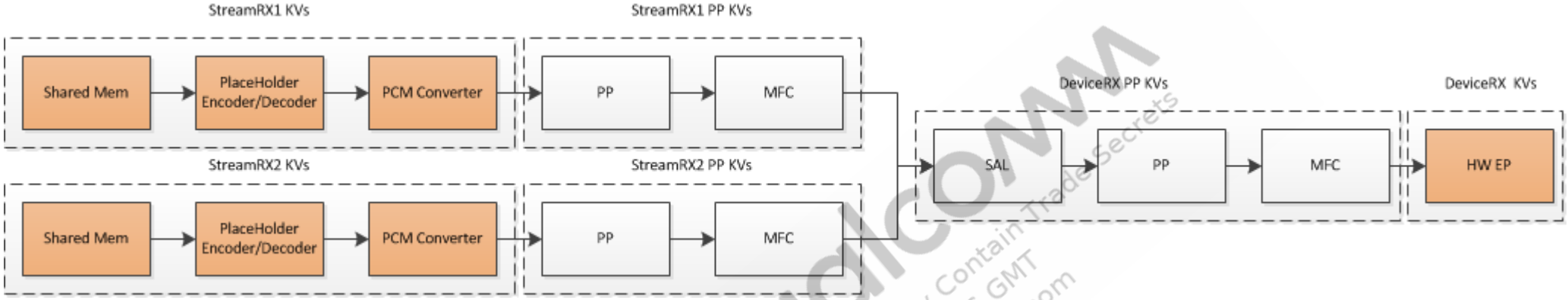

Qualcomm
Confidential - May Contain Trade Secrets
2022-08-10 09:35:26 GMT
nijiasheng@longcheer.com

Loopback with postprocessing use case

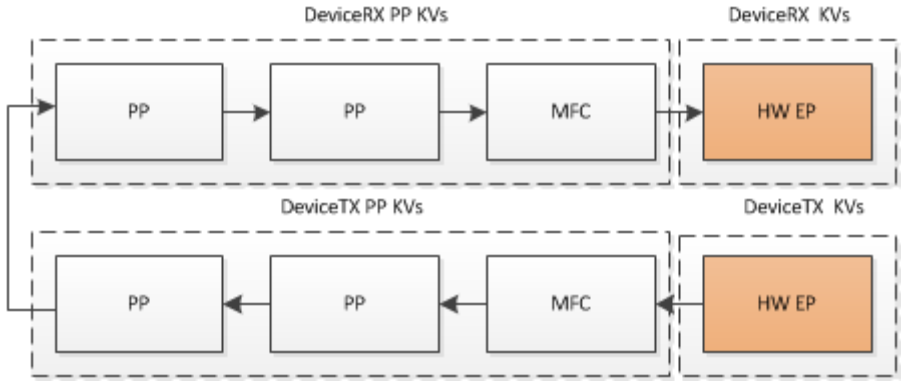

PCM Hostless Session 1, Device 1: GKV1: <DeviceRX PP KVs, DeviceRX KVs>
PCM Hostless Session 2, Device 2: GKV2: <DeviceTX PP KVs, DeviceTX KVs>

Confidential – Qualcomm Technologies, Inc. and/or its affiliated companies – May Contain Trade Secrets | MAY CONTAIN U.S. AND INTERNATIONAL EXPORT CONTROLLED INFORMATION

Mixer Controls

Purpose	Mixer control
Front end – Back end	“PCM0 connect” SLIM_0_RX 'PCM0 disconnect' SLIM_0_RX
Back end fixup	'SLIM_0_RX rate ch fmt' <sample rate> <channels> <fmt>
GKV/CKV	’SLIM_0_RX metadata' bytes 'PCM0 metadata' bytes
Update CKV	'PCM0 setcal’ bytes
Set module(s) custom parameter(s)	'PCM0 setParam' bytes 'PCM0 getParam' bytes
Set module(s) parameter using TKV	'PCM0 SetParamTag' bytes
Echo reference	'PCM1 echoReference' SLIM_0_RX
Setup loopback	'PCM1 loopback’ PCM0
Sidetone for voice	'PCM0 Sidetone’ PCM1
Register for events/Get event payload	'PCM0 event’ bytes

Qualcomm
Confidential - May Contain Trade Secrets
2022-01-10 09:39:26 GMT
nijinshengbiomacheer.com

Qualcomm Audio Layer (QAL)

Qualcomm
Confidential - May Contain Trade Secrets
2022-08-10 05:25:26 GMT
nijiasheng@lonestheer.com

Overview

- Clients interface with QAL to set up audio and voice use cases
  - Map stream/device(s) parameters to GKVs/CKVs
  - Fires mixer controls to front ends/back ends with GKVs/CKVs
  - Open/close PCM/compress device nodes with TinyALSA APIs
  - Configures modules in the graph pertaining to session using module tags and TKVs
- Provide APIs to enable use cases across LX platforms

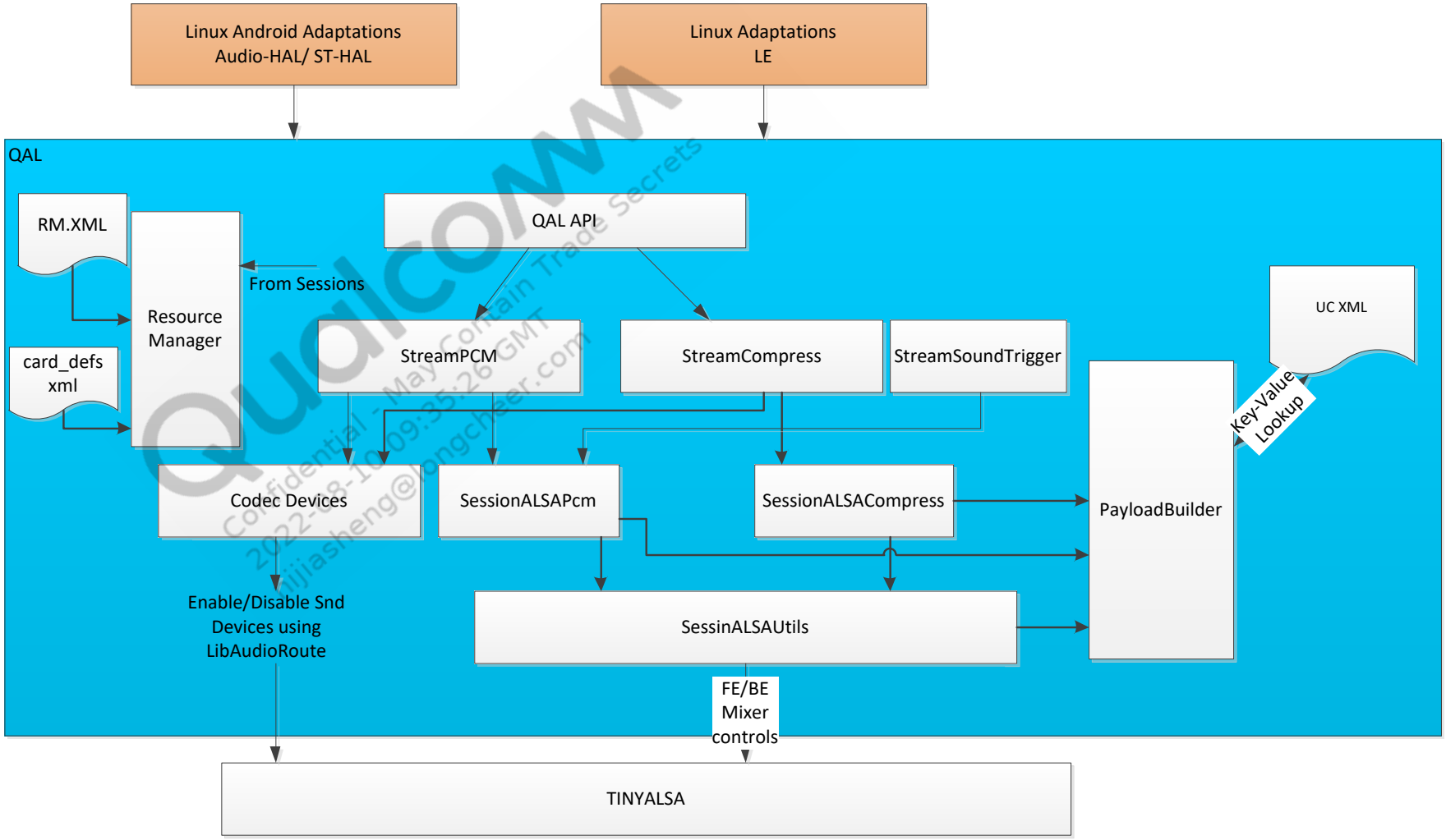

Qualcomm Confidential - May Contain Trade Secrets 2022-08-10 09:35:26 GMT lijiasheng@longcheer.com

Confidential – Qualcomm Technologies, Inc. and/or its affiliated companies – May Contain Trade Secrets | MAY CONTAIN U.S. AND INTERNATIONAL EXPORT CONTROLLED INFORMATION

Overview (cont.)

- Resource Manager
  - Keeps track of all active sessions and devices to enable concurrencies
  - Parses and loads configuration of platform related XMLs:
    - Resource_manager.xml – Device to back end mapping, policy making attributes
    - Card_defs.xml – Available PCM/compress nodes and their capabilities
    - Usecase_info.xml – Look up GKVs and CKVs
  - Sound card parsing and mixer init
- StreamPCM/compress
  - Entry point into playback (PCM/compress)
  - Controls session and device
- SessionAlsaPCM/compress
  - Set up and control PCM/compress sessions
  - Issue mixer controls and connect front end to back end

Qualcomm Confidential - May Contain Trade Secrets 2022-08-10 09:35:26 GMT nijiasheng@longcheer.com

Confidential – Qualcomm Technologies, Inc. and/or its affiliated companies – May Contain Trade Secrets | MAY CONTAIN U.S. AND INTERNATIONAL EXPORT CONTROLLED INFORMATION

Overview (cont.)

- Codec device
  - Enables/disables codec mixer controls and keeps track of device ref-count
- SessionAlsaUtils
  - Retrieves stream/streampp/devicepp/device KVs from payload builder
  - Constructs mixer controls at run time for front end and back end
  - Enables mixer controls on front end and back end
- PayloadBuilder
  - Reads usecase_info.xml to get GKVs/CKVs for the given audio session
  - Constructs custom payloads for modules in a given graph
- QAL API
  - For example, open, close, set_volume, set_mute, set_pause

Qualcomm Confidential – May Contain Trade Secrets
2022-03-10 03:35:26 GMT
nijiasheng@longcheer.com

Confidential – Qualcomm Technologies, Inc. and/or its affiliated companies – May Contain Trade Secrets | MAY CONTAIN U.S. AND INTERNATIONAL EXPORT CONTROLLED INFORMATION

High Level Call Flow – Playback

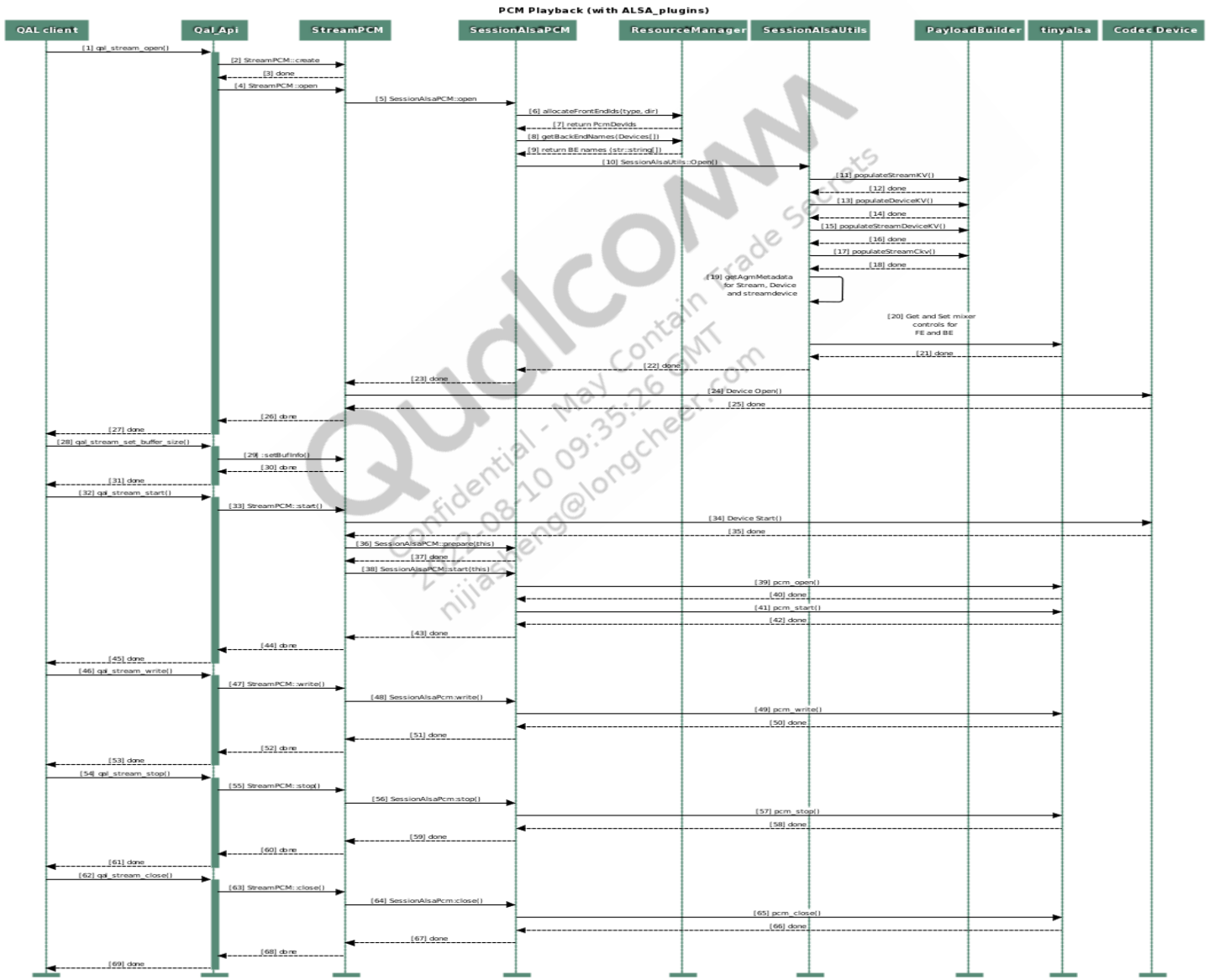

Qualcomm Confidential - May Contain Trade Secrets 2020-08-10 09:35:26 GMT nijiasheng@longcheer.com

Platform Configuration

- What has changed:
  - audio_platform_info.xml
    - Relevant information mapped to resource_manager.xml and kvh2xml.xml
  - sound_trigger_platform_info.xml
    - Modified to fit into new architecture
- What has not changed:
  - audio_policy_configuration.xml
  - audio_configs.xml
  - audio_effects.xml
  - mixer_paths.xml – Only has codec mixer controls

Qualcomm Confidential - May Contain Trade Secrets 2020-08-10 09:35:26 GMT nijiashang@longcheer.com

Confidential – Qualcomm Technologies, Inc. and/or its affiliated companies – May Contain Trade Secrets | MAY CONTAIN U.S. AND INTERNATIONAL EXPORT CONTROLLED INFORMATION

References

Qualcomm
Confidential - May Contain Trade Secrets
2022-08-10 09:35:26 GMT
nijiasheng@longcheer.com

References

Acronyms	
Acronym or term	**Definition**
ADM	Audio Device Manager
AFE	Audio Front End
AGM	Audio Graph Manager
ASM	Audio Stream Manager
CKVs	Calibration Key Vectors
GKVs	Graph Key Vectors
GSL	SPF Service Layer
QAL	Qualcomm Audio Library

Qualcomm
Confidential - May Contain Trade Secrets
2022-08-10 09:35:26 GMT
nijiasheng@longcheer.com

Questions?

https://createpoint.qti.qualcomm.com

Qualcomm
Confidential - May Contain Trade Secrets
2022-08-10 09:35:26 GMT
nijiasheng@longcheer.com